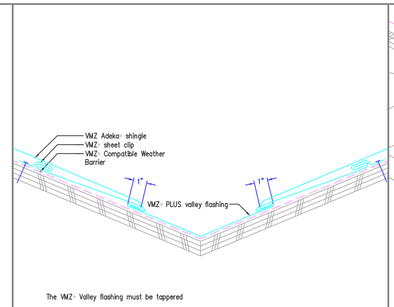

VALLEY 16
3"= 1'- 0" ADEKA-R 1302

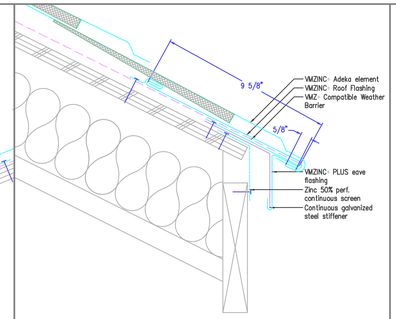

EAVE #2 12
3"= 1'- 0" ADEKA-R 1201

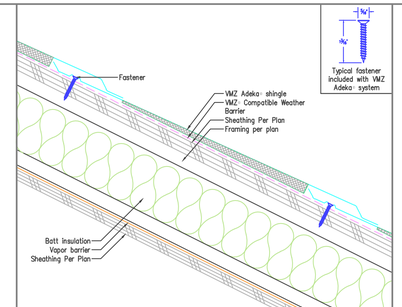

LONGITUDINAL ASSEMBLY 4
3"= 1'- 0" ADEKA-R 1003

Adeka

Panel Dims:		15.5" x 15.5"	Panels per box:		24 panels
On Center:	Vertical	16 1/16"	Coverage:	Per panel	1.22 sq ft
	Horizontal	22 1/16"		Per crate	29.28 sq ft
Radius:	Convex:	Concave:	Thickness:		0.65mm
Min slope:	33' Field	NA	Weight:	Per Panel	1.7 lb
		3:12		Per Box	42 lb

ADEKA TECH SHEET 0
NTS ADEKA

VMZINC
VM Building Solutions USA:
1105 Tryon Village Dr
Suite 303 PMB 1029
Cary, NC 27518
(919) 296-8868 O.
(919) 648- 4612 F.
Please visit our website at:
www.vmzinc.com/en-us

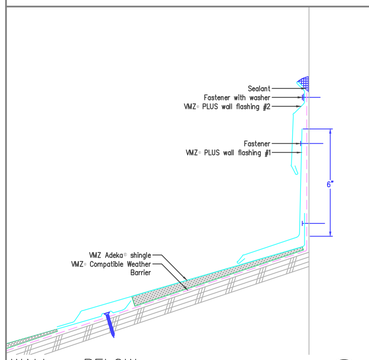

WALL - BELOW 21
3"= 1'- 0" ADEKA-R 1520

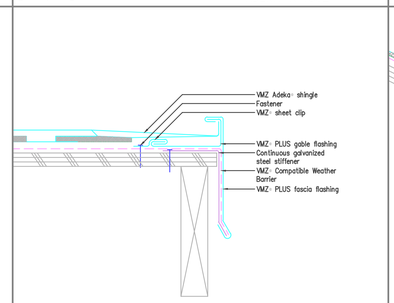

GABLE 17
3"= 1'- 0" ADEKA-R 1400

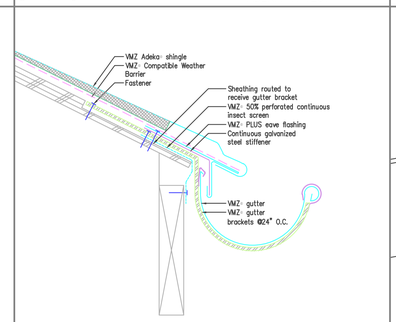

EAVE WITH ROUND GUTTER 13
3"= 1'- 0" ADEKA-R 1210

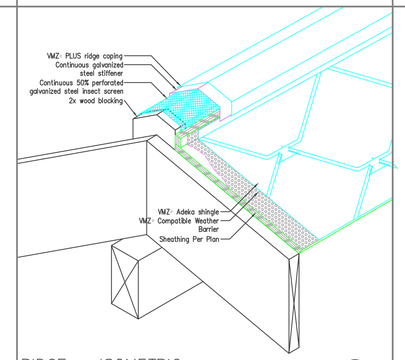

RIDGE - ISOMETRIC 9
NTS ADEKA-R 1101

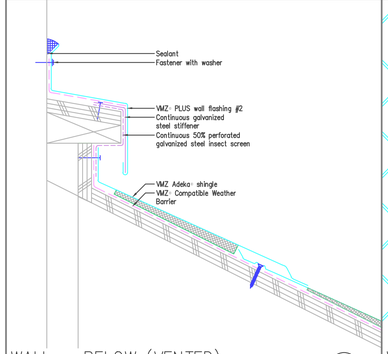

WALL - BELOW (VENTED) 22
3"= 1'- 0" ADEKA-R 1521

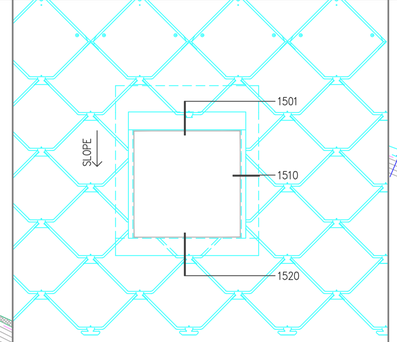

WALL CONDITIONS KEY 18
NTS ADEKA-R 1500

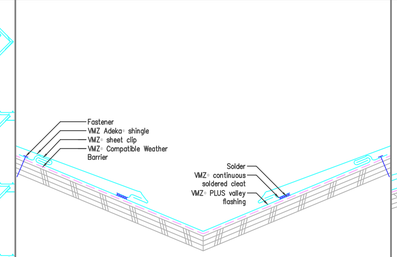

VALLEY 14
3"= 1'- 0" ADEKA-R 1300

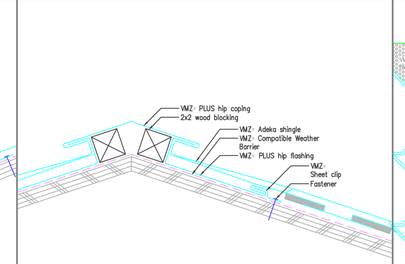

HIP 10
3"= 1'- 0" ADEKA-R 1120

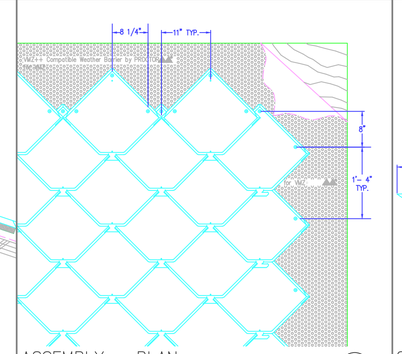

ASSEMBLY - PLAN 6
NTS ADEKA-R 1005

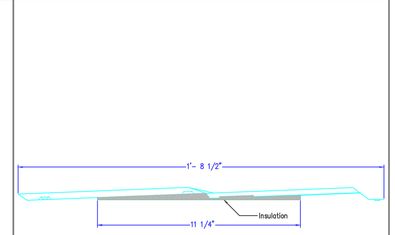

SHINGLE - PROFILE 2
3"= 1'- 0" ADEKA-R 1001

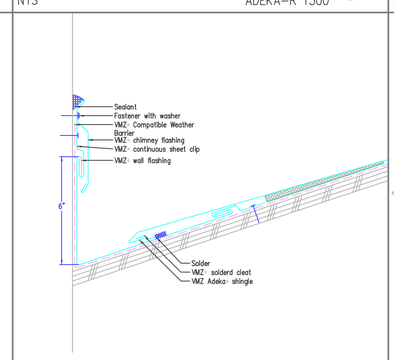

WALL - ABOVE 19
3"= 1'- 0" ADEKA-R 1501

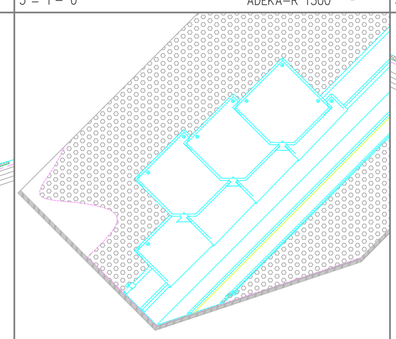

VALLEY - ISOMETRIC 15
NTS ADEKA-R 1301

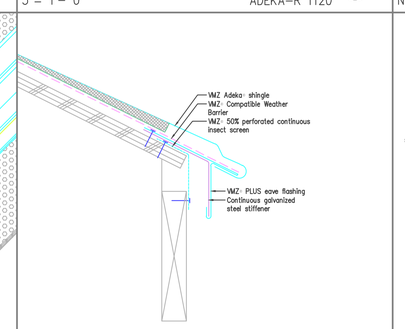

EAVE 11
3"= 1'- 0" ADEKA-R 1200

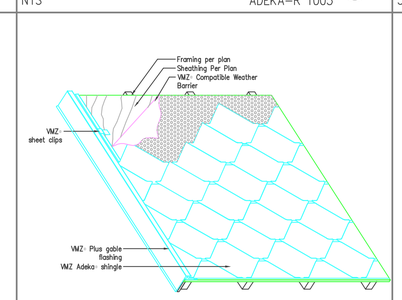

ASSEMBLY - ISOMETRIC 7
NTS ADEKA-R 1006

PROJECT: ADEKA ROOF SYSTEM
SCALE: SEE DETAIL
DATE: 10/04/2010
ISSUED FOR: INSTALLER/ARCHITECT
DRAWN BY: JTI

FOR ILLUSTRATION ONLY

All technical information and suggestions herein are believed to be reliable and accurate, nothing stated herein is to be taken as a warranty. Responsibility for review and validation remains solely with the design authority or other authority having jurisdiction.

SHEET: 1 OF 1

Adeka

Panel Dims:		15.5" x 15.5"	Panels per box:		24 panels
On Center:	Vertical	16 1/16"	Coverage:	Per panel	1.22 sq ft
	Horizontal	22 1/16"		Per crate	29.28 sq ft
Radius:	Convex:	Concave:	Thickness:		0.65mm
Min slope:	33' Field	NA	Weight:	Per Panel	1.7 lb
		3:12		Per Box	42 lb

TECHNICAL SHEET

VMZINC

VM Building Solutions USA
1105 Tyron Village Dr
Suite 303 PMB 1029
Cary, NC 27518
(919) 296-8868 O.
(919) 648-4612 F.
www.vmzinc.com/en-us

Scale: NTS
Date: 04/30/2012
Drawn By: LDL

For general information e-mail:
info@vmzinc-us.com

SYSTEM: Adeka-R
DRAWING: 0000

NOT A SHOP DRAWING
FOR ILLUSTRATION ONLY
While all technical information and suggestions herein are believed to be reliable and accurate, nothing stated herein is to be taken as a warranty, expressed or implied. Responsibility for review remains solely with the design authority or other authority

	Single	Box (24)
Coverage ft²:	1.26 ft²	30.24 ft²
Weight:	1.75 lb	42 lb

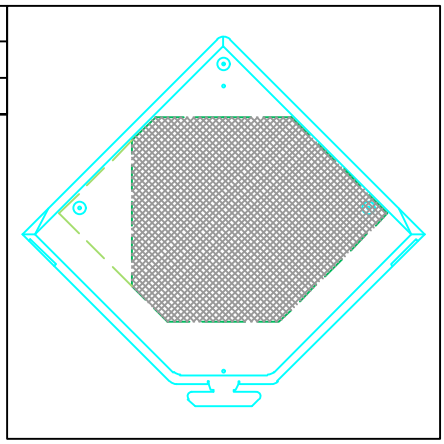

Note:
Trim insulation as needed to accomodate clips, flashings, etc.

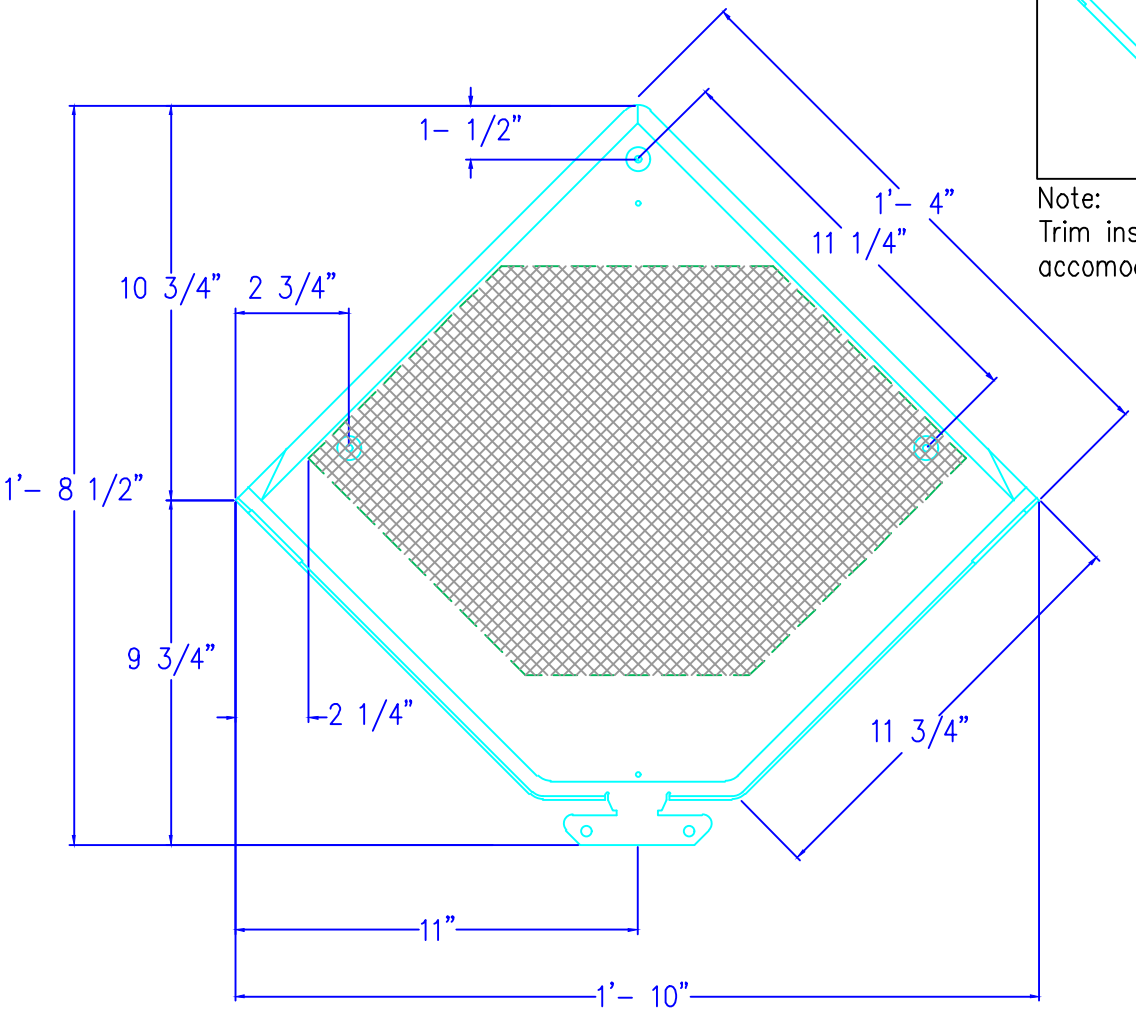

ADEKA SHINGLE

VMZINC

VM Building Solutions USA
1105 Tyron Village Dr
Suite 303 PMB 1029
Cary, NC 27518
(919) 296-8868 O.
(919) 648-4612 F.
www.vmzinc.com/en-us

Scale: NTS
Date: 04/30/2012
Drawn By: LDL
For general information e-mail: info@vmzinc-us.com

SYSTEM: Adeka-R
DRAWING: 1000

NOT A SHOP DRAWING

FOR ILLUSTRATION ONLY

While all technical information and suggestions herein are believed to be reliable and accurate, nothing stated herein is to be taken as a warranty, expressed or implied. Responsibility for review remains solely with the design authority or other authority

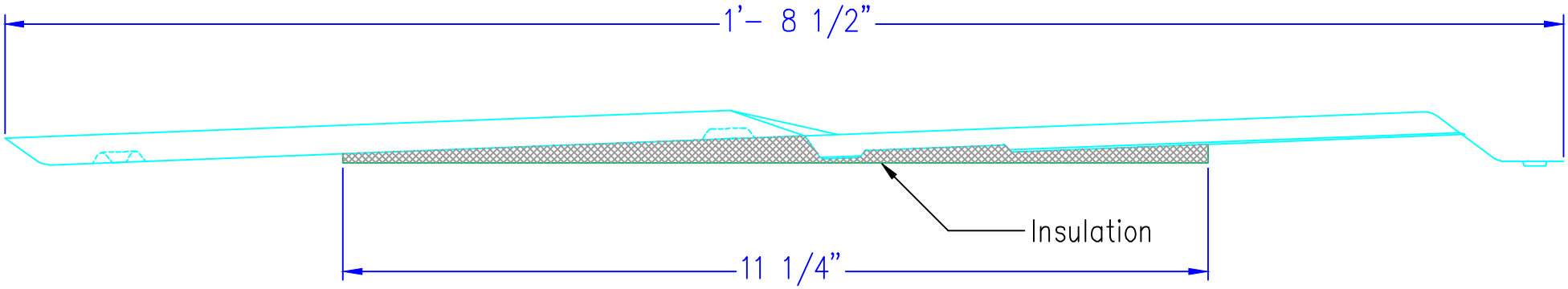

SHINGLE – PROFILE

VM Building Solutions USA
1105 Tyron Village Dr
Suite 303 PMB 1029
Cary, NC 27518
(919) 296-8868 O.
(919) 648-4612 F.
www.vmzinc.com/en-us

Scale: NTS	SYSTEM: Adeka-R
Date: 04/30/2012	
Drawn By: LDL	DRAWING: 1001
For general information e-mail: info@vmzinc-us.com	

www.vmzinc.com

NOT A SHOP DRAWING

FOR ILLUSTRATION ONLY

While all technical information and suggestions herein are believed to be reliable and accurate, nothing stated herein is to be taken as a warranty, expressed or implied. Responsibility for review remains solely with the design authority or other authority

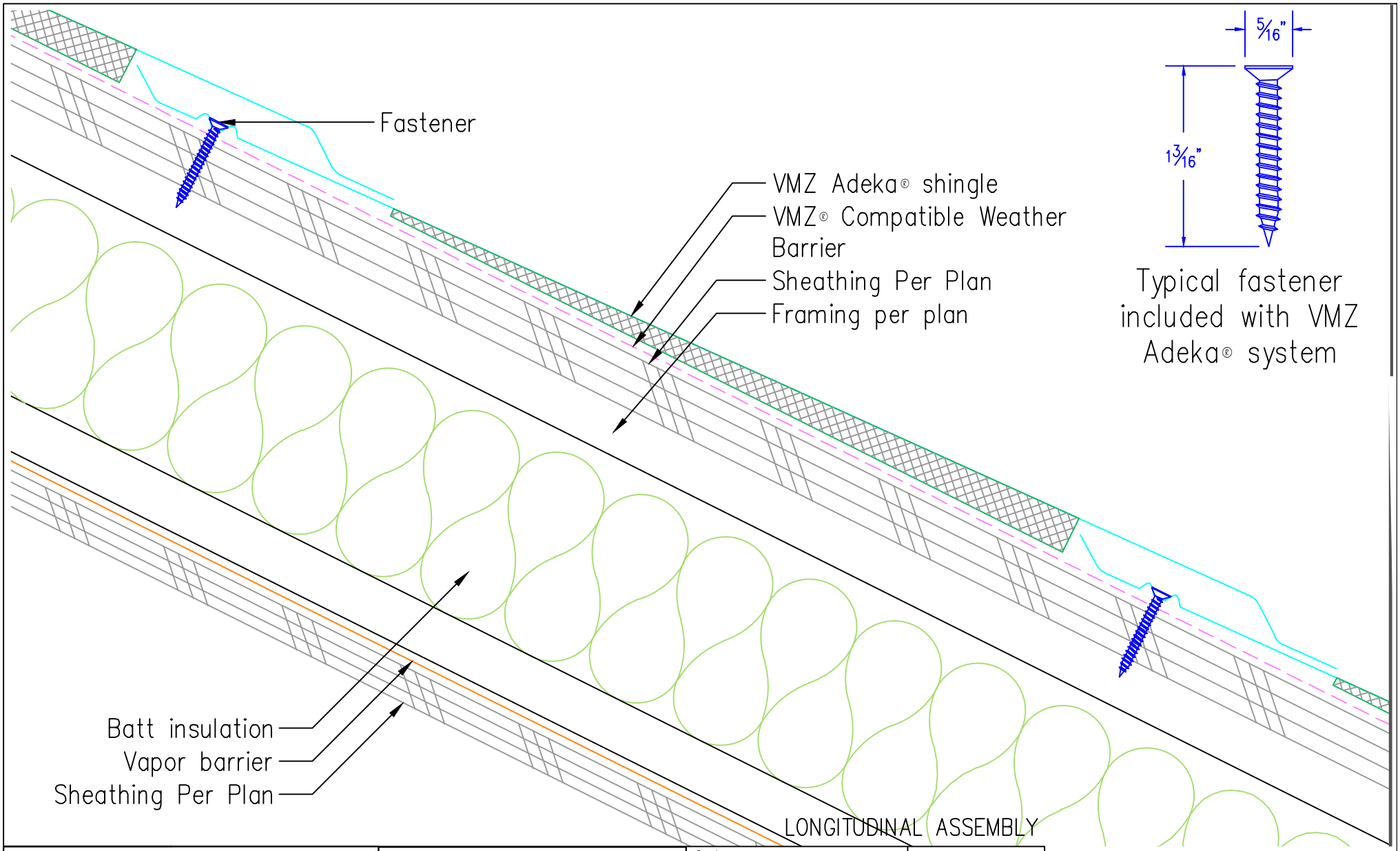

LONGITUDINAL ASSEMBLY

VMZINC

VM Building Solutions USA
1105 Tyron Village Dr
Suite 303 PMB 1029
Cary, NC 27518
(919) 296-8868 O.
(919) 648-4612 F.
www.vmzinc.com/en-us

Scale: 6" = 1' - 0"

Date: 04/30/2012

Drawn By: LDL

For general information e-mail: info@vmzinc-us.com

SYSTEM: Adeka-R

DRAWING: 1003

NOT A SHOP DRAWING

FOR ILLUSTRATION ONLY

While all technical information and suggestions herein are believed to be reliable and accurate, nothing stated herein is to be taken as a warranty, expressed or implied. Responsibility for review remains solely with the design authority or other authority

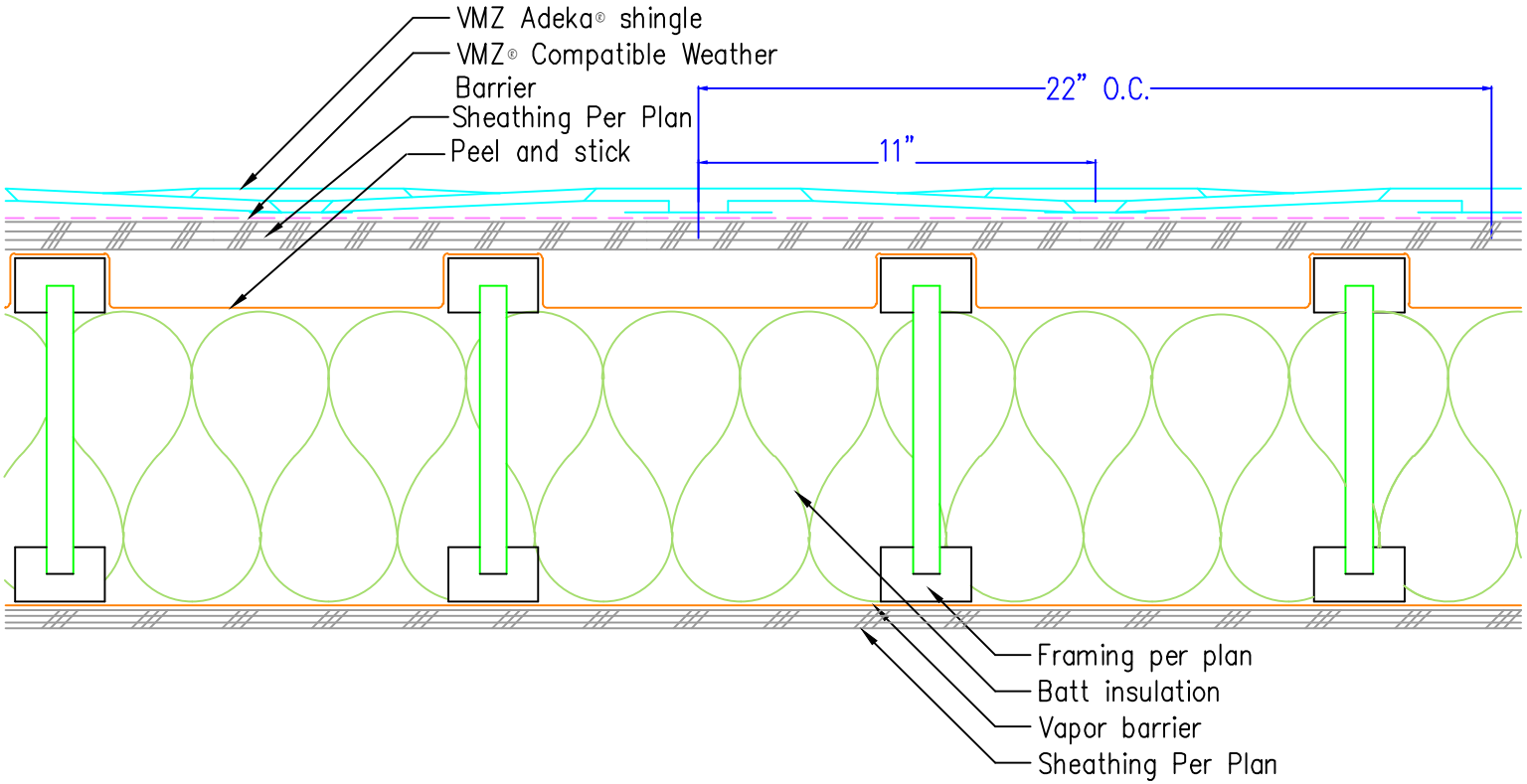

Note:
If slope is less than 3:12 lap Zinc Plus Underlay on 12" and seal, apply self adhering membrane flashing at perimeter and valleys.

CLIP LAYOUT #3

VM Building Solutions USA
1105 Tyron Village Dr
Suite 303 PMB 1029
Cary, NC 27518
(919) 296-8868 O.
(919) 648-4612 F.
www.vmzinc.com/en-us

Scale: NTS	SYSTEM: Adeka-R
Date: 04/30/2012	
Drawn By: LDL	DRAWING: 1004
For general information e-mail: info@vmzinc-us.com	

NOT A SHOP DRAWING
FOR ILLUSTRATION ONLY
While all technical information and suggestions herein are believed to be reliable and accurate, nothing stated herein is to be taken as a warranty, expressed or implied. Responsibility for review remains solely with the design authority or other authority

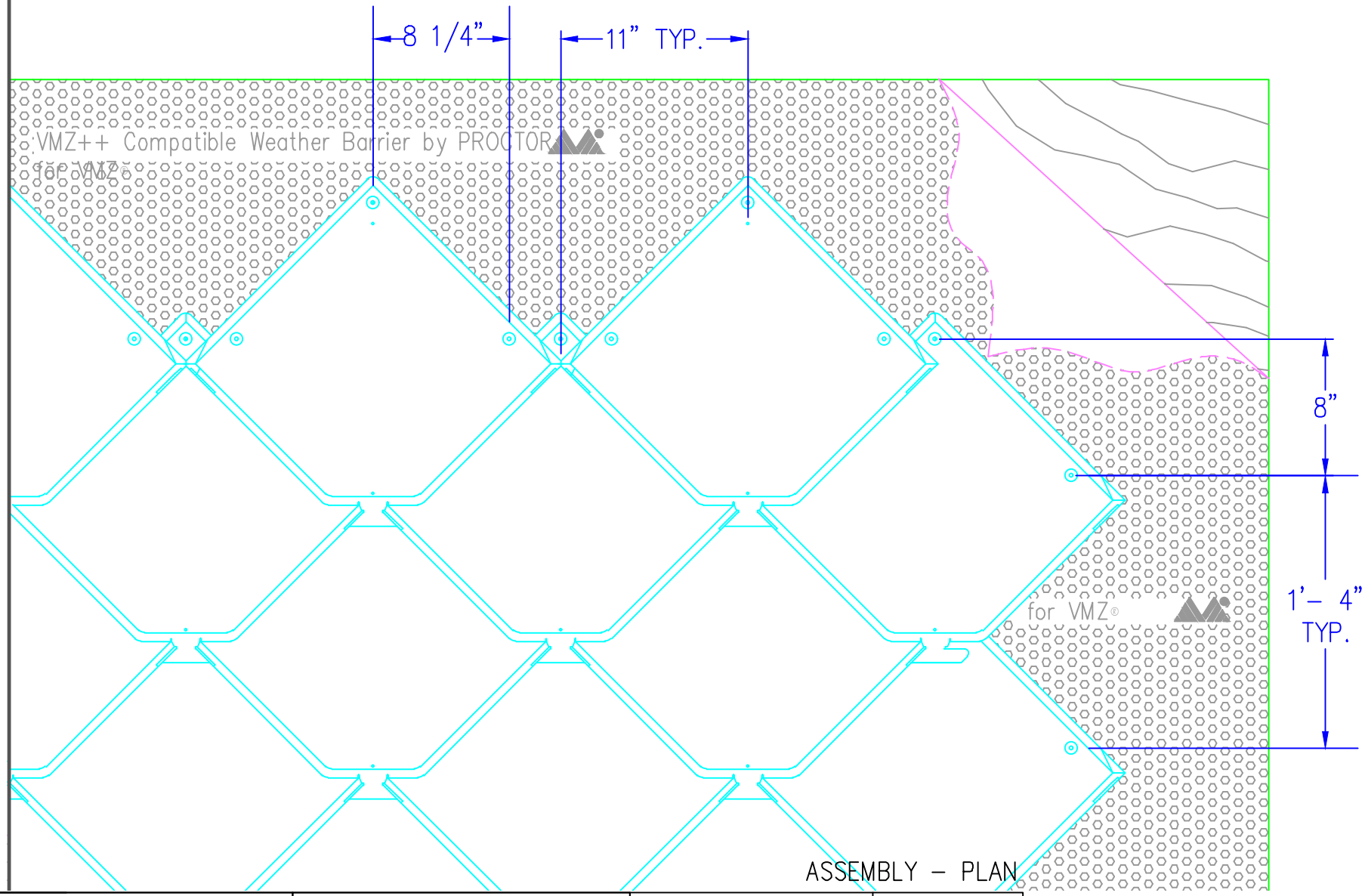

VMZINC

VM Building Solutions USA
1105 Tyron Village Dr
Suite 303 PMB 1029
Cary, NC 27518
(919) 296-8868 O.
(919) 648-4612 F.
www.vmzinc.com/en-us

Scale: NTS	SYSTEM: Adeka-R
Date: 04/30/2012	
Drawn By: LDL	DRAWING: 1005
For general information e-mail: info@vmzinc-us.com	

NOT A SHOP DRAWING

FOR ILLUSTRATION ONLY

While all technical information and suggestions herein are believed to be reliable and accurate, nothing stated herein is to be taken as a warranty, expressed or implied. Responsibility for review remains solely with the design authority or other authority

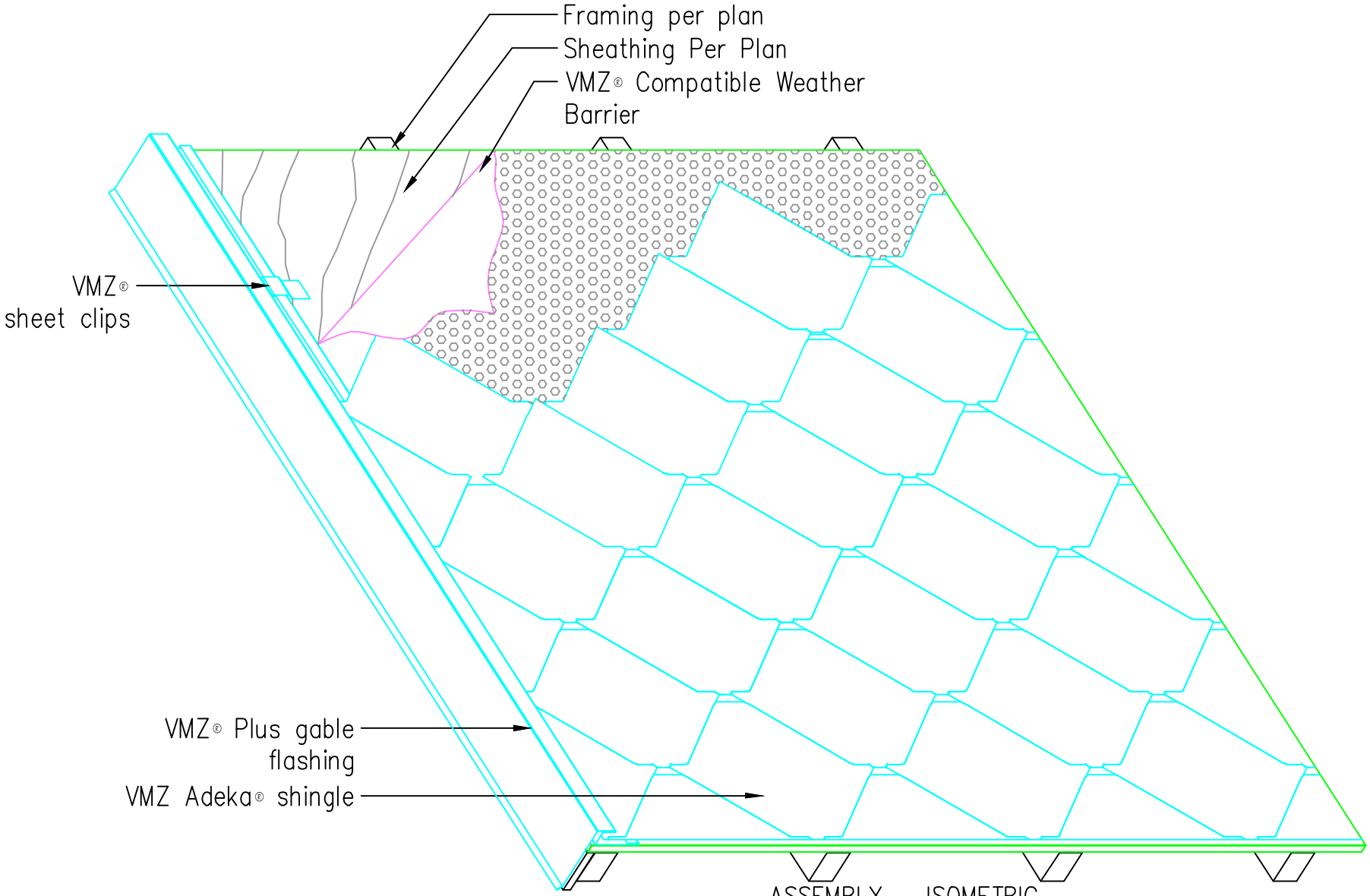

ASSEMBLY – ISOMETRIC

VMZINC

VM Building Solutions USA
1105 Tyron Village Dr
Suite 303 PMB 1029
Cary, NC 27518
(919) 296-8868 O.
(919) 648-4612 F.
www.vmzinc.com/en-us

Scale: NTS
Date: 04/30/2012
Drawn By: LDL
For general information e-mail: info@vmzinc-us.com

SYSTEM: Adeka-R
DRAWING: 1006

www.vmzinc.com

NOT A SHOP DRAWING

FOR ILLUSTRATION ONLY

While all technical information and suggestions herein are believed to be reliable and accurate, nothing stated herein is to be taken as a warranty, expressed or implied. Responsibility for review remains solely with the design authority or other authority

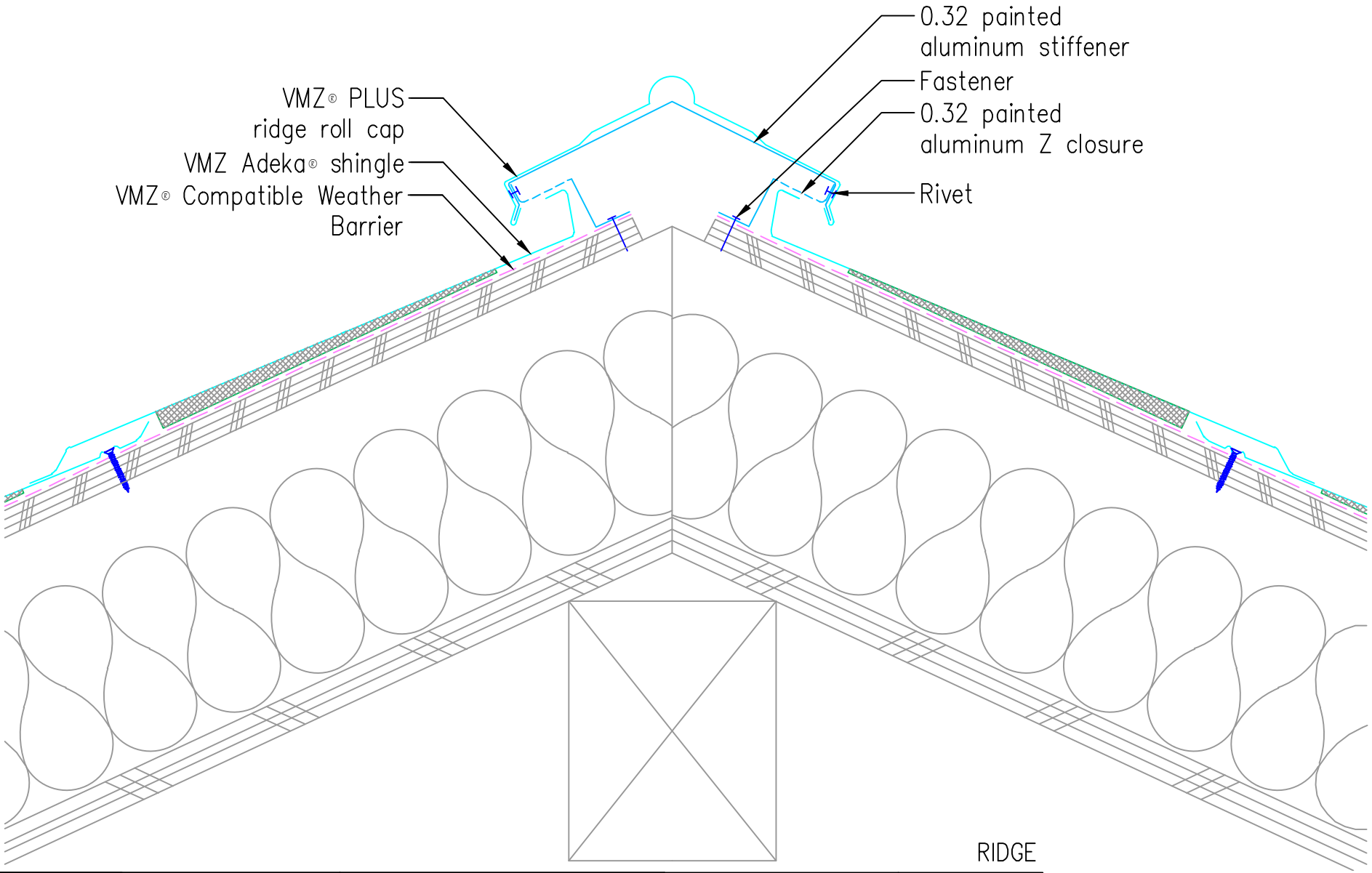

VMZINC

VM Building Solutions USA
1105 Tyron Village Dr
Suite 303 PMB 1029
Cary, NC 27518
(919) 296-8868 O.
(919) 648-4612 F.
www.vmzinc.com/en-us

Scale: NTS
Date: 04/30/2012
Drawn By: LDL
For general information e-mail: info@vmzinc-us.com

SYSTEM: Adeka-R
DRAWING: 1100

www.vmzinc.com

NOT A SHOP DRAWING

FOR ILLUSTRATION ONLY

While all technical information and suggestions herein are believed to be reliable and accurate, nothing stated herein is to be taken as a warranty, expressed or implied. Responsibility for review remains solely with the design authority or other authority

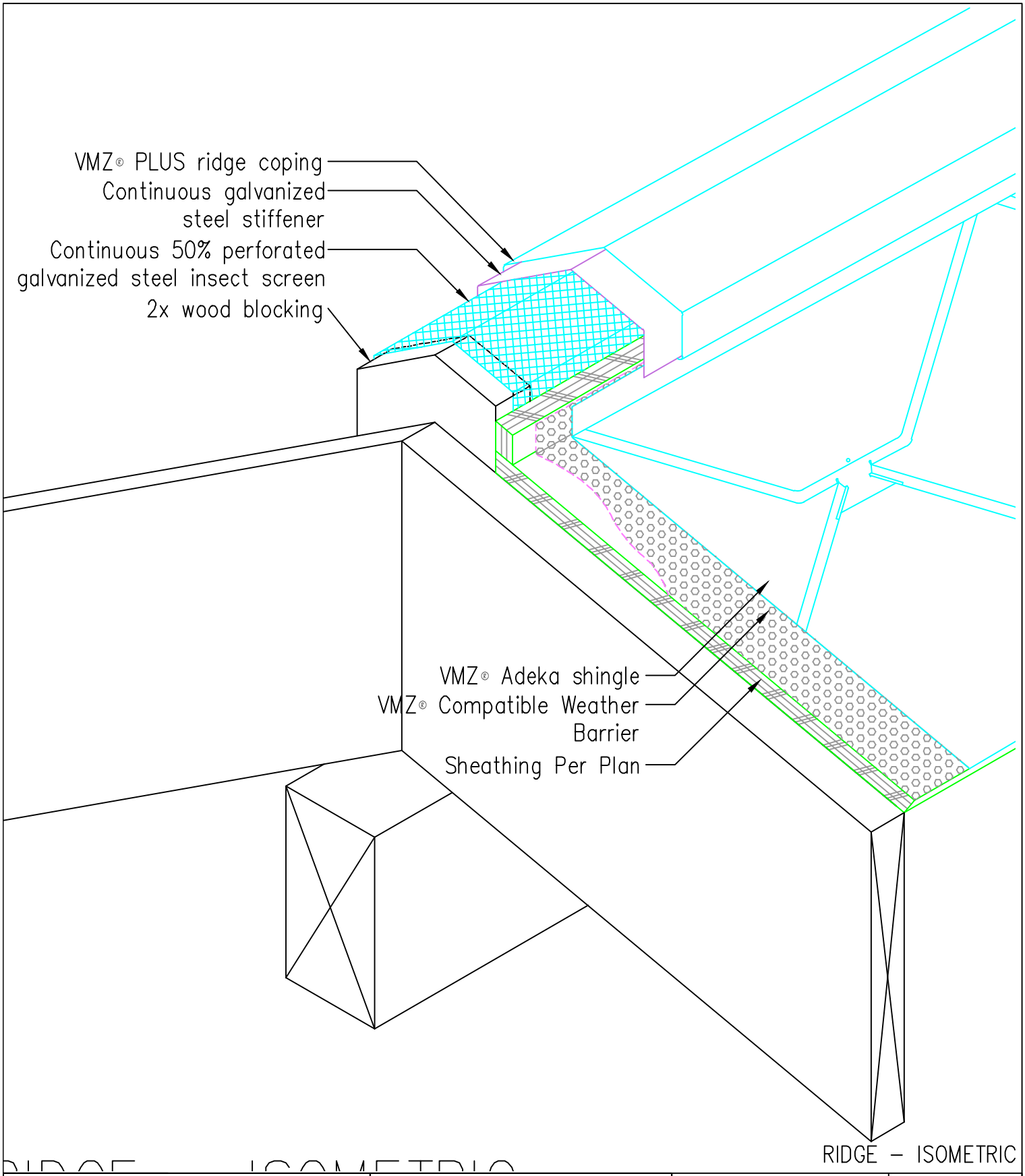

RIDGE – ISOMETRIC

VM Building Solutions USA
1105 Tyron Village Dr
Suite 303 PMB 1029
Cary, NC 27518
(919) 296-8868 O.
(919) 648-4612 F.
www.vmzinc.com/en-us

Scale: NTS
Date: 04/30/2012
Drawn By: LDL
For general information e-mail: info@vmzinc-us.com

SYSTEM: Adeka-R
DRAWING: 1101

www.vmzinc.com
NOT A SHOP DRAWING
FOR ILLUSTRATION ONLY
While all technical information and suggestions herein are believed to be reliable and accurate, nothing stated herein is to be taken as a warranty, expressed or implied. Responsibility for review remains solely with the design authority or other authority

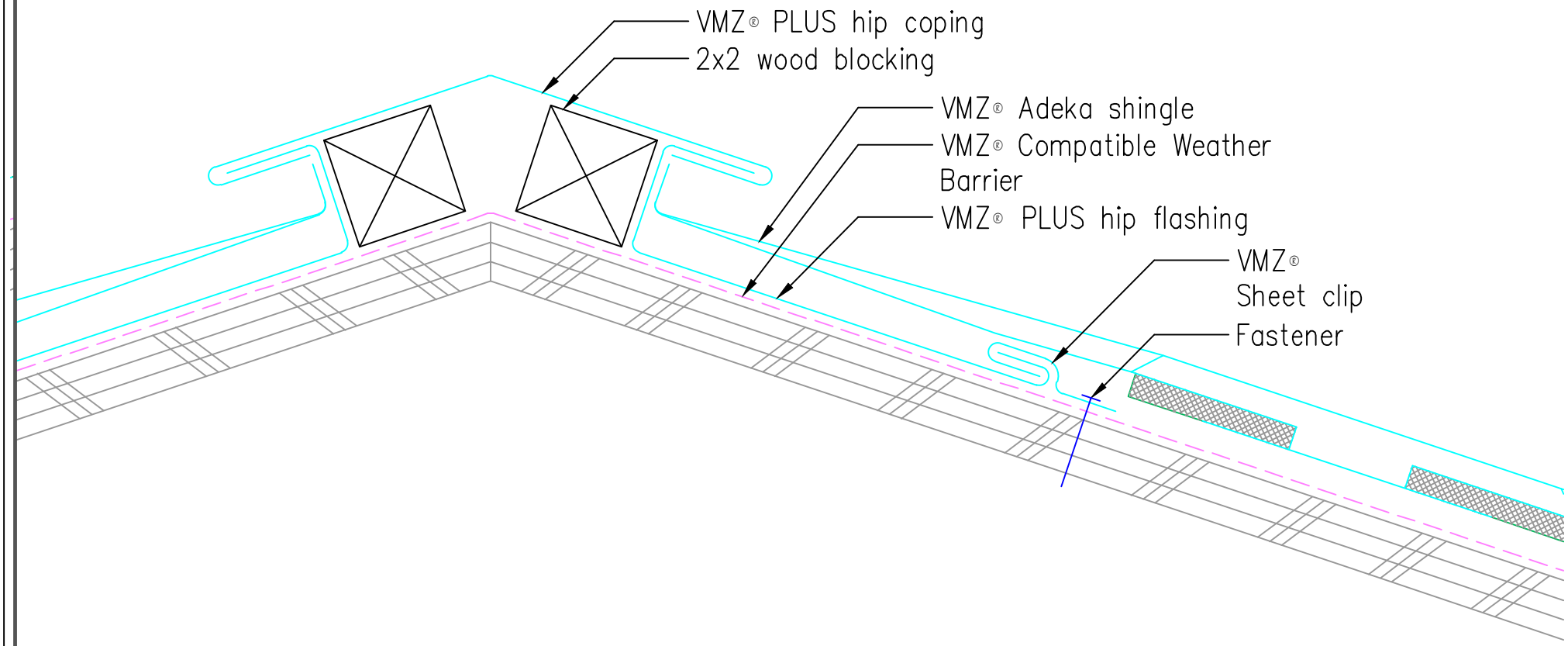

HIP

VM Building Solutions USA
1105 Tyron Village Dr
Suite 303 PMB 1029
Cary, NC 27518
(919) 296-8868 O.
(919) 648-4612 F.
www.vmzinc.com/en-us

Scale: 6" = 1' - 0"

Date: 04/30/2012

Drawn By: LDL

For general information e-mail: info@vmzinc-us.com

SYSTEM: Adeka-R

DRAWING: 1120

www.vmzinc.com

NOT A SHOP DRAWING

FOR ILLUSTRATION ONLY

While all technical information and suggestions herein are believed to be reliable and accurate, nothing stated herein is to be taken as a warranty, expressed or implied. Responsibility for review remains solely with the design authority or other authority

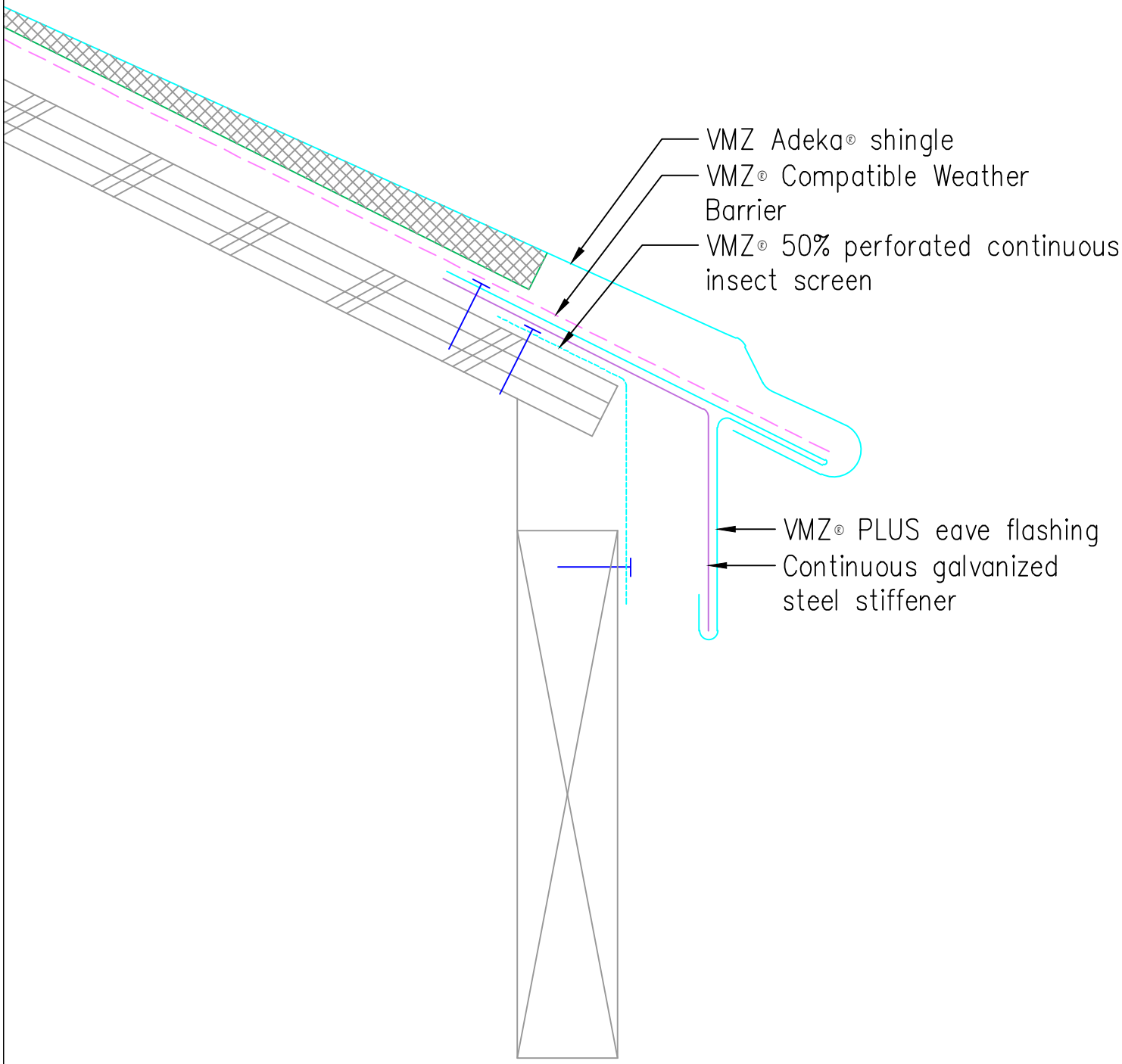

EAVE #1

VM Building Solutions USA
1105 Tyron Village Dr
Suite 303 PMB 1029
Cary, NC 27518
(919) 296-8868 O.
(919) 648-4612 F.
www.vmzinc.com/en-us

Scale: 6" = 1' - 0"

Date: 04/30/2012

Drawn By: LDL

For general information e-mail: info@vmzinc-us.com

SYSTEM: Adeka-R

DRAWING: 1200

NOT A SHOP DRAWING
FOR ILLUSTRATION ONLY
While all technical information and suggestions herein are believed to be reliable and accurate, nothing stated herein is to be taken as a warranty, expressed or implied. Responsibility for review remains solely with the design authority or other authority

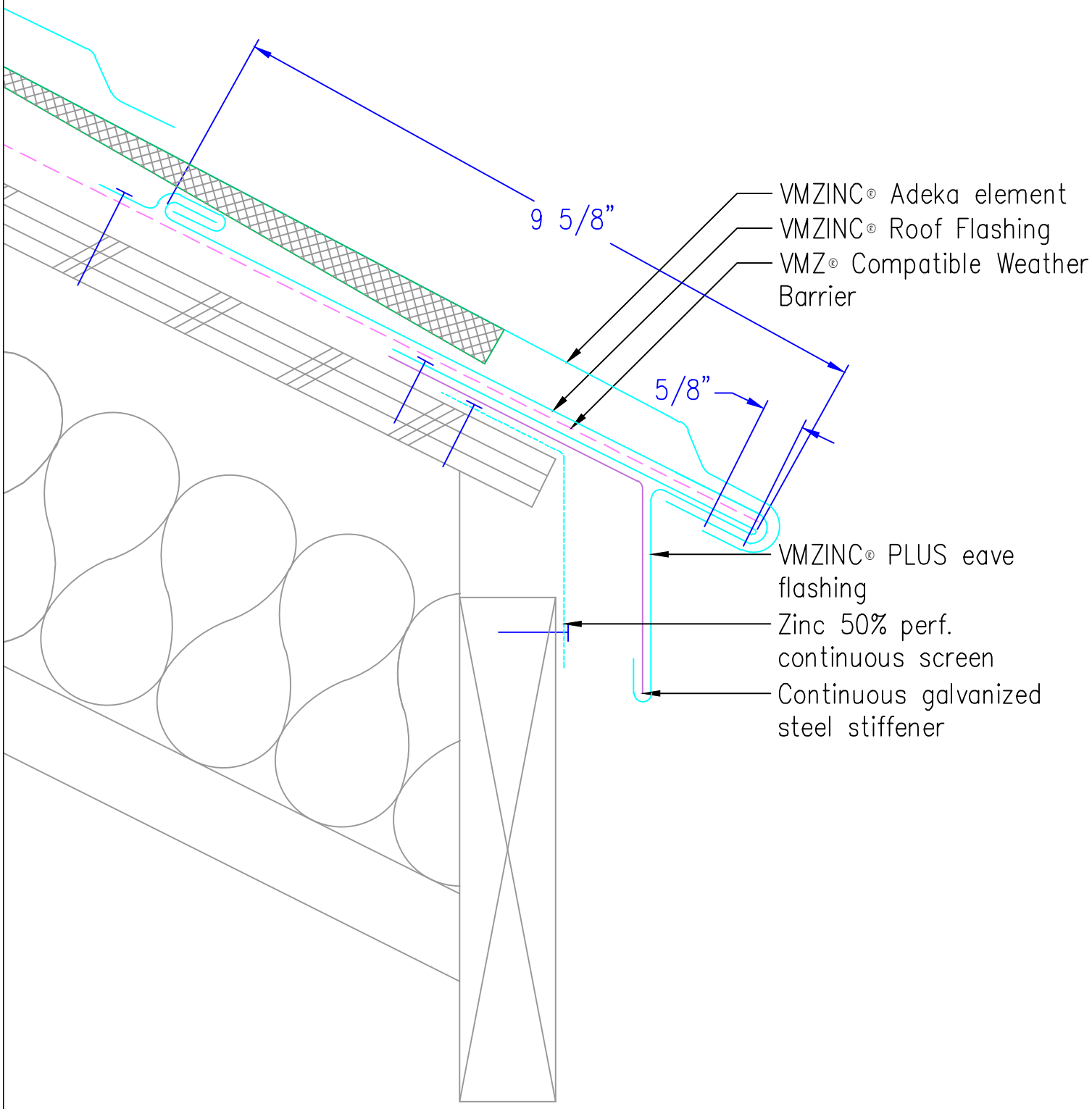

EAVE #2

VM Building Solutions USA
1105 Tyron Village Dr
Suite 303 PMB 1029
Cary, NC 27518
(919) 296-8868 O.
(919) 648-4612 F.
www.vmzinc.com/en-us

Scale: 6" = 1' - 0"
Date: 04/30/2012
Drawn By: LDL
For general information e-mail: info@vmzinc-us.com

SYSTEM: Adeka-R
DRAWING: 1201

NOT A SHOP DRAWING

FOR ILLUSTRATION ONLY

While all technical information and suggestions herein are believed to be reliable and accurate, nothing stated herein is to be taken as a warranty, expressed or implied. Responsibility for review remains solely with the design authority or other authority

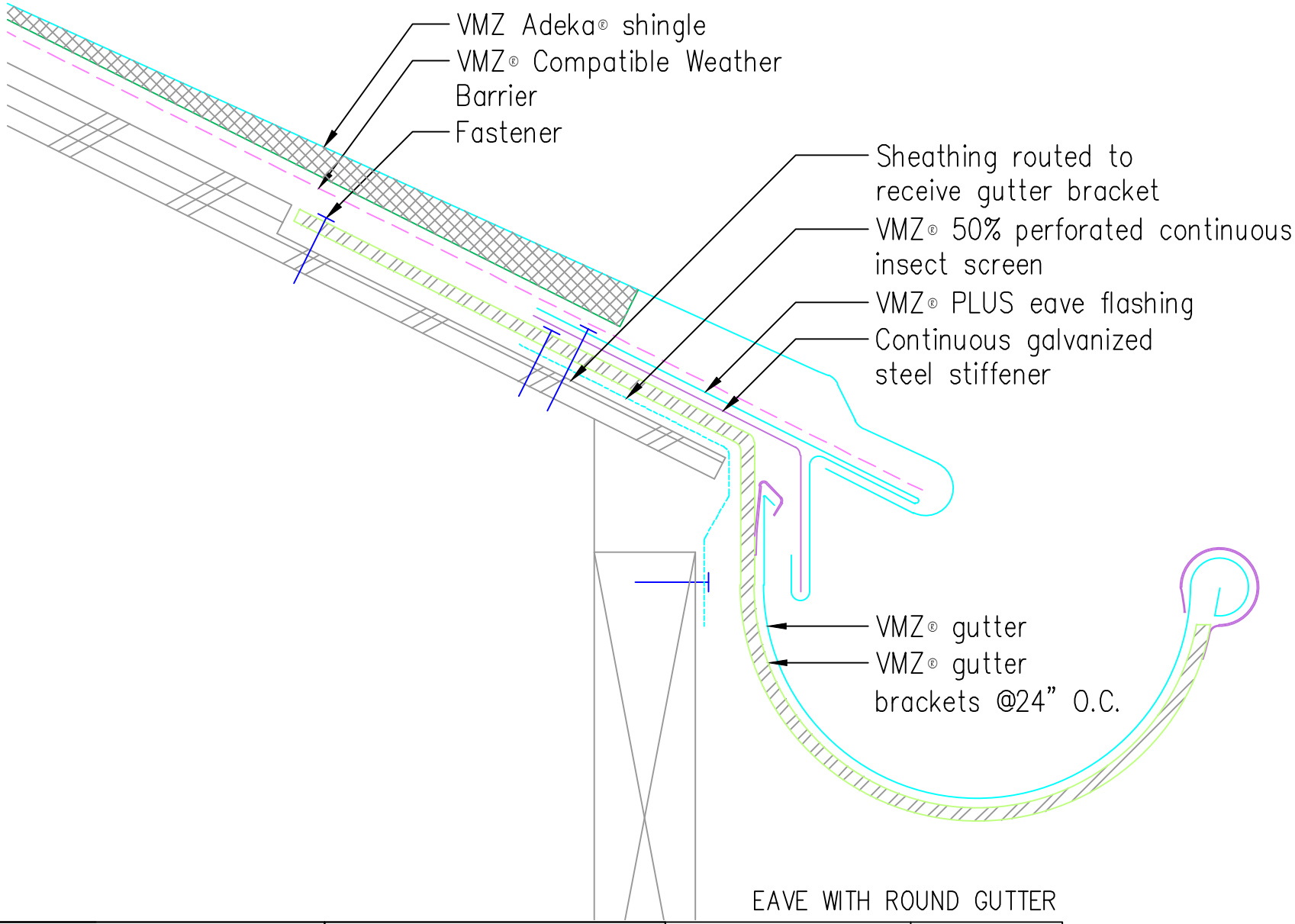

EAVE WITH ROUND GUTTER

VMZINC

VM Building Solutions USA
1105 Tyron Village Dr
Suite 303 PMB 1029
Cary, NC 27518
(919) 296-8868 O.
(919) 648-4612 F.
www.vmzinc.com/en-us

Scale: 6" = 1' - 0"	SYSTEM: Adeka-R
Date: 04/30/2012	
Drawn By: LDL	DRAWING: 1210
For general information e-mail: info@vmzinc-us.com	

NOT A SHOP DRAWING

FOR ILLUSTRATION ONLY

While all technical information and suggestions herein are believed to be reliable and accurate, nothing stated herein is to be taken as a warranty, expressed or implied. Responsibility for review remains solely with the design authority or other authority

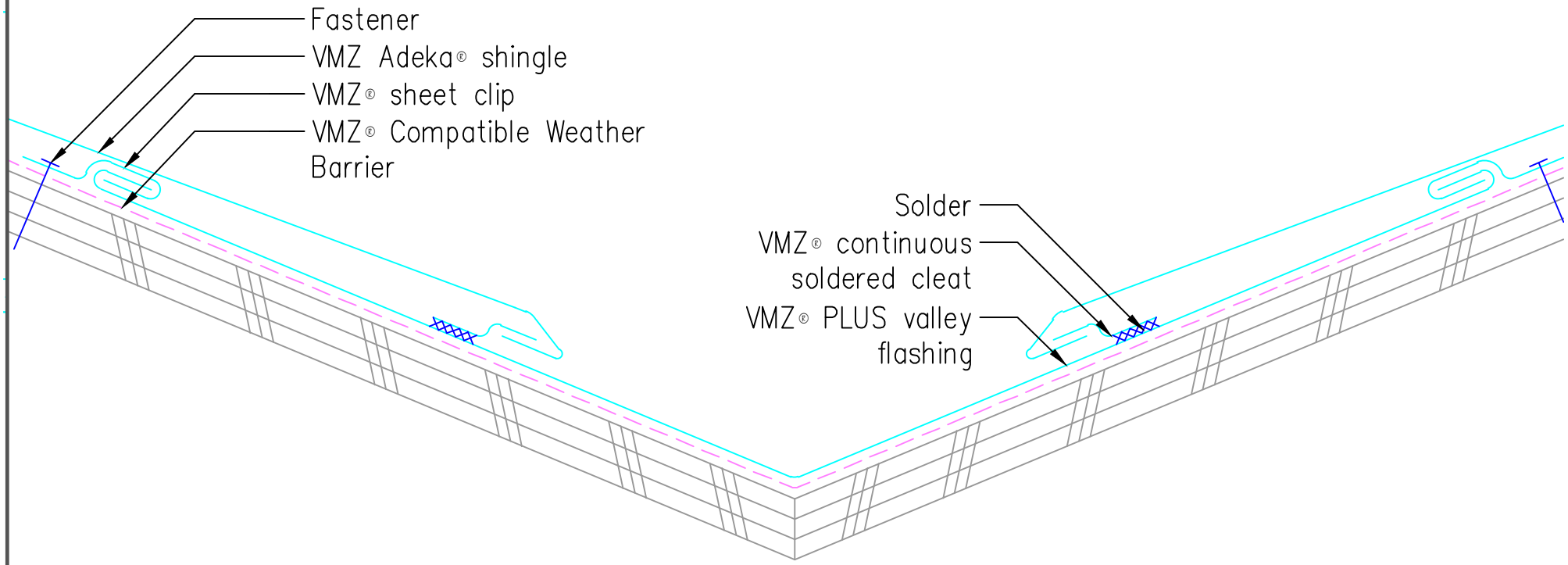

VALLEY

VM Building Solutions USA
1105 Tyron Village Dr
Suite 303 PMB 1029
Cary, NC 27518
(919) 296-8868 O.
(919) 648-4612 F.
www.vmzinc.com/en-us

Scale: 6" = 1' - 0"

Date: 04/30/2012

Drawn By: LDL

For general information e-mail: info@vmzinc-us.com

SYSTEM: Adeka-R

DRAWING: 1300

NOT A SHOP DRAWING

FOR ILLUSTRATION ONLY

While all technical information and suggestions herein are believed to be reliable and accurate, nothing stated herein is to be taken as a warranty, expressed or implied. Responsibility for review remains solely with the design authority or other authority

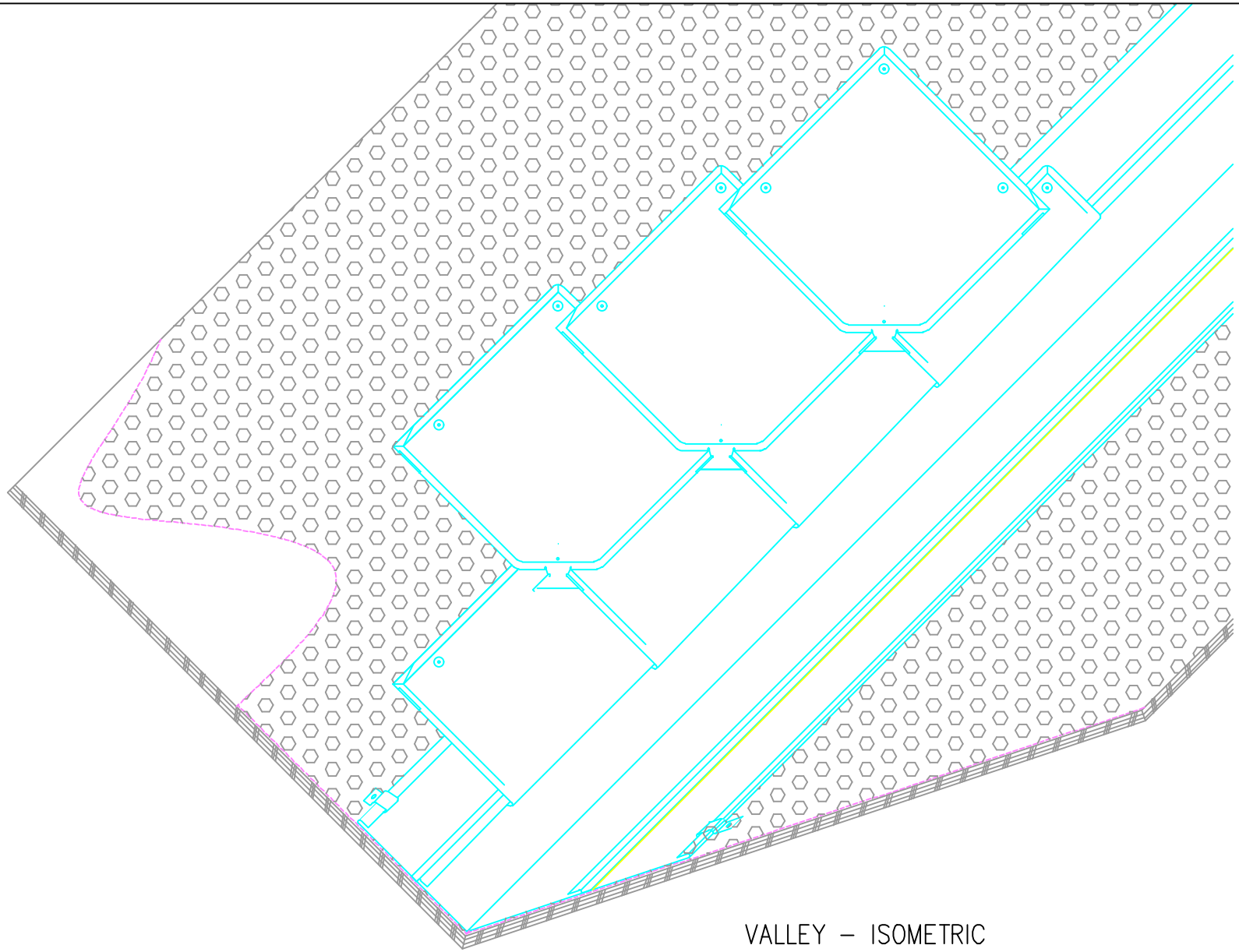

VALLEY – ISOMETRIC

VM Building Solutions USA
1105 Tyron Village Dr
Suite 303 PMB 1029
Cary, NC 27518
(919) 296-8868 O.
(919) 648-4612 F.
www.vmzinc.com/en-us

Scale: NTS

Date: 04/30/2012

Drawn By: LDL

For general information e-mail: info@vmzinc-us.com

SYSTEM: Adeka-R

DRAWING: 1301

NOT A SHOP DRAWING

FOR ILLUSTRATION ONLY

While all technical information and suggestions herein are believed to be reliable and accurate, nothing stated herein is to be taken as a warranty, expressed or implied. Responsibility for review remains solely with the design authority or other authority

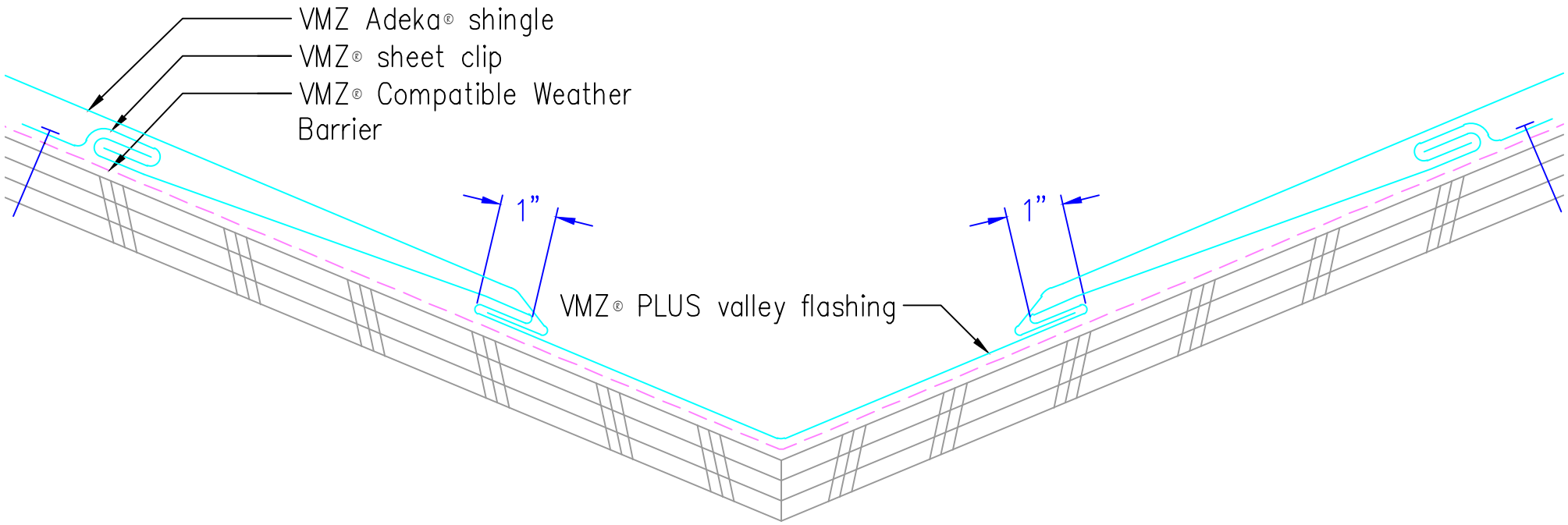

The VMZ® Valley flashing must be tappered

VALLEY

VM Building Solutions USA
1105 Tyron Village Dr
Suite 303 PMB 1029
Cary, NC 27518
(919) 296-8868 O.
(919) 648-4612 F.
www.vmzinc.com/en-us

Scale: 6" = 1' - 0"

Date: 04/30/2012

Drawn By: LDL

For general information e-mail: info@vmzinc-us.com

SYSTEM: Adeka-R

DRAWING: 1302

www.vmzinc.com

NOT A SHOP DRAWING

FOR ILLUSTRATION ONLY

While all technical information and suggestions herein are believed to be reliable and accurate, nothing stated herein is to be taken as a warranty, expressed or implied. Responsibility for review remains solely with the design authority or other authority

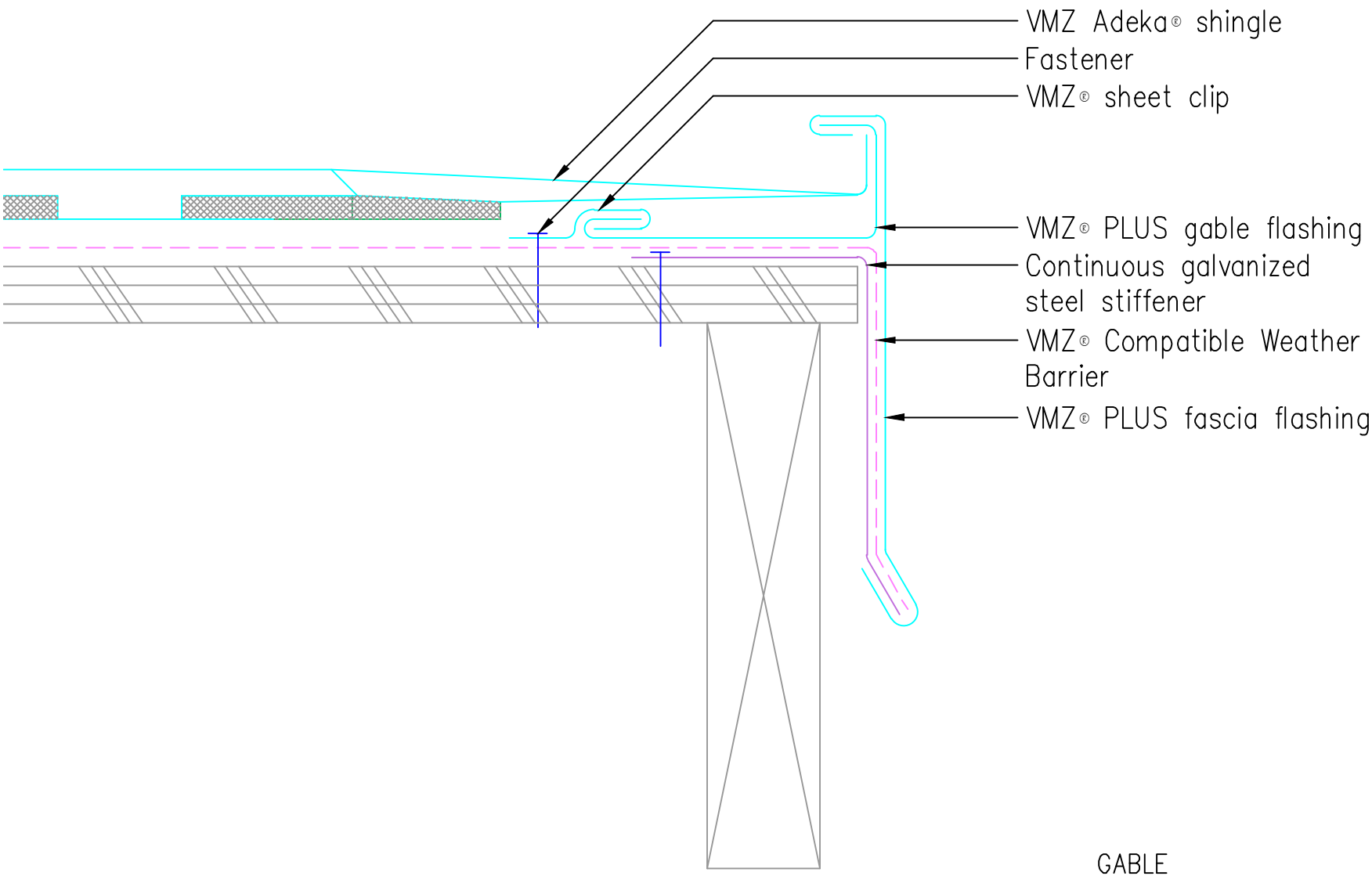

GABLE

VMZINC

VM Building Solutions USA
1105 Tyron Village Dr
Suite 303 PMB 1029
Cary, NC 27518
(919) 296-8868 O.
(919) 648-4612 F.
www.vmzinc.com/en-us

Scale: 6" = 1' - 0"

Date: 04/30/2012

Drawn By: LDL

For general information e-mail: info@vmzinc-us.com

SYSTEM: Adeka-R

DRAWING: 1400

NOT A SHOP DRAWING

FOR ILLUSTRATION ONLY

While all technical information and suggestions herein are believed to be reliable and accurate, nothing stated herein is to be taken as a warranty, expressed or implied. Responsibility for review remains solely with the design authority or other authority

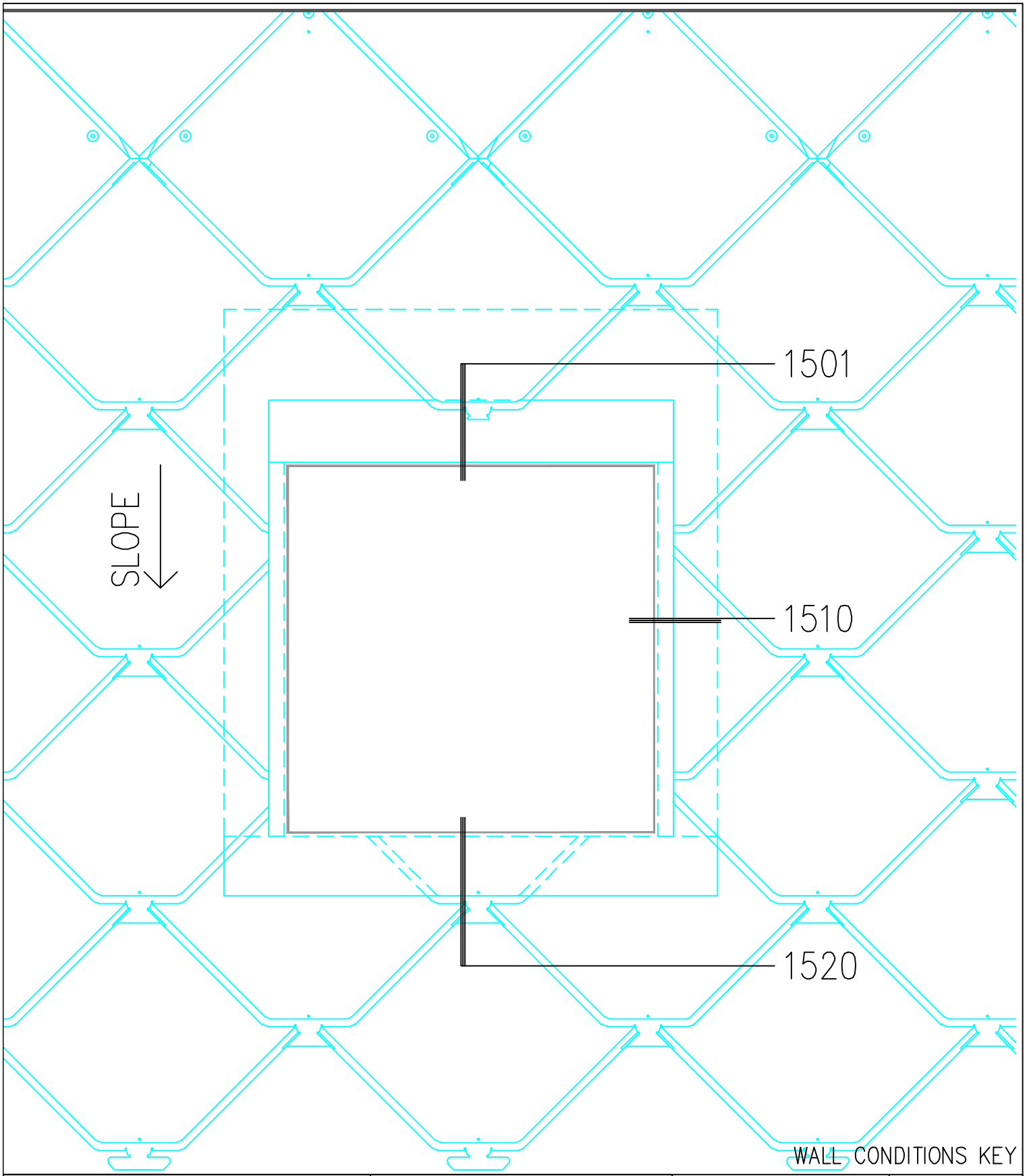

WALL CONDITIONS KEY

VMZINC

VM Building Solutions USA
1105 Tyron Village Dr
Suite 303 PMB 1029
Cary, NC 27518
(919) 296-8868 O.
(919) 648-4612 F.
www.vmzinc.com/en-us

Scale: NTS

Date: 04/30/2012

Drawn By: LDL

For general information e-mail: info@vmzinc-us.com

SYSTEM: Adeka-R

DRAWING: 1500

NOT A SHOP DRAWING

FOR ILLUSTRATION ONLY

While all technical information and suggestions herein are believed to be reliable and accurate, nothing stated herein is to be taken as a warranty, expressed or implied. Responsibility for review remains solely with the design authority or other authority

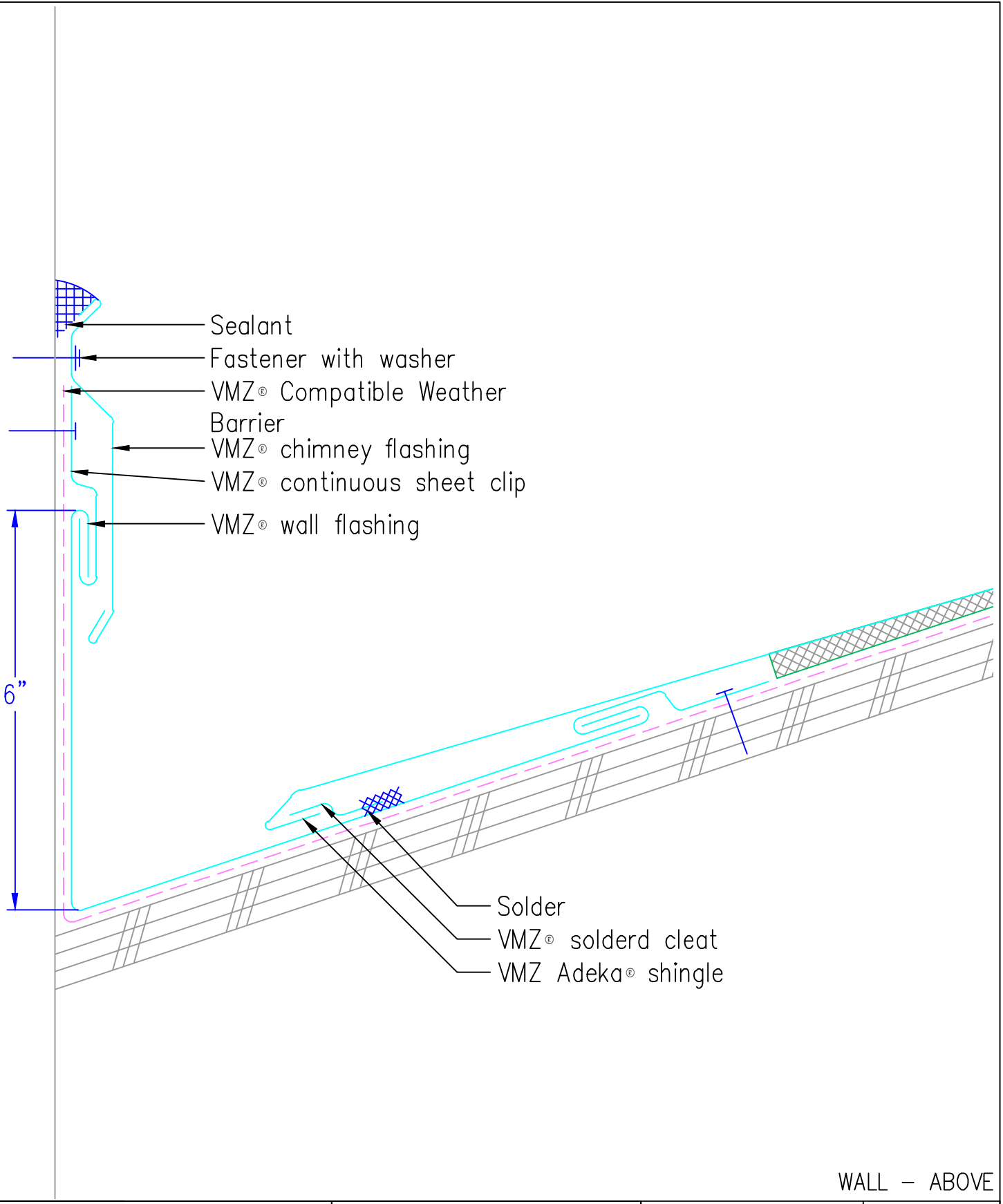

WALL – ABOVE

VM Building Solutions USA
1105 Tyron Village Dr
Suite 303 PMB 1029
Cary, NC 27518
(919) 296-8868 O.
(919) 648-4612 F.
www.vmzinc.com/en-us

Scale: 6" = 1' – 0"
Date: 04/30/2012
Drawn By: LDL
For general information e-mail: info@vmzinc-us.com

SYSTEM: Adeka-R
DRAWING: 1501

NOT A SHOP DRAWING
FOR ILLUSTRATION ONLY
While all technical information and suggestions herein are believed to be reliable and accurate, nothing stated herein is to be taken as a warranty, expressed or implied. Responsibility for review remains solely with the design authority or other authority

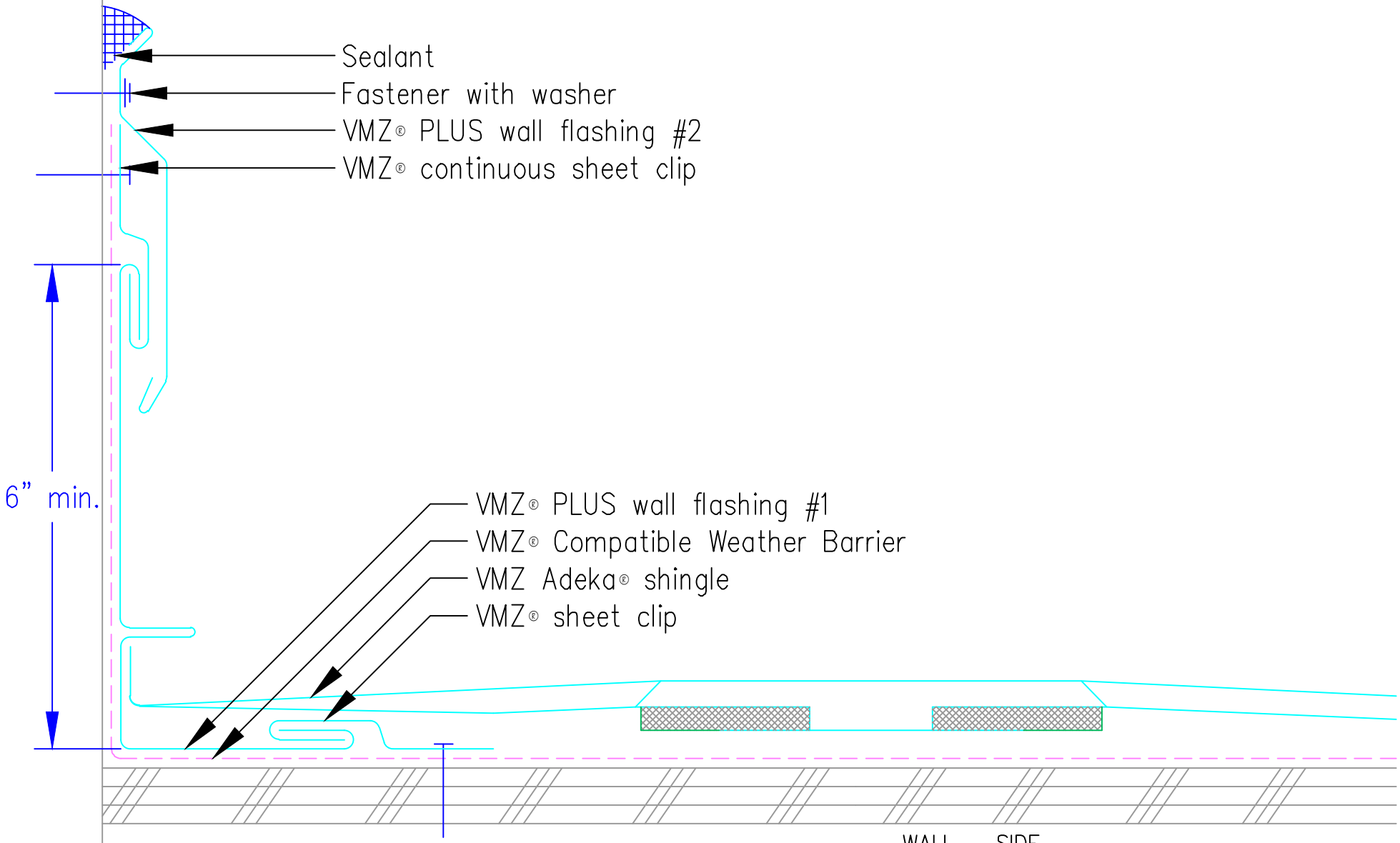

WALL – SIDE

VMZINC

VM Building Solutions USA
1105 Tyron Village Dr
Suite 303 PMB 1029
Cary, NC 27518
(919) 296-8868 O.
(919) 648-4612 F.
www.vmzinc.com/en-us

Scale: NTS
Date: 04/30/2012
Drawn By: LDL
For general information e-mail: info@vmzinc-us.com

SYSTEM: Adeka-R
DRAWING: 1510

NOT A SHOP DRAWING
FOR ILLUSTRATION ONLY
While all technical information and suggestions herein are believed to be reliable and accurate, nothing stated herein is to be taken as a warranty, expressed or implied. Responsibility for review remains solely with the design authority or other authority

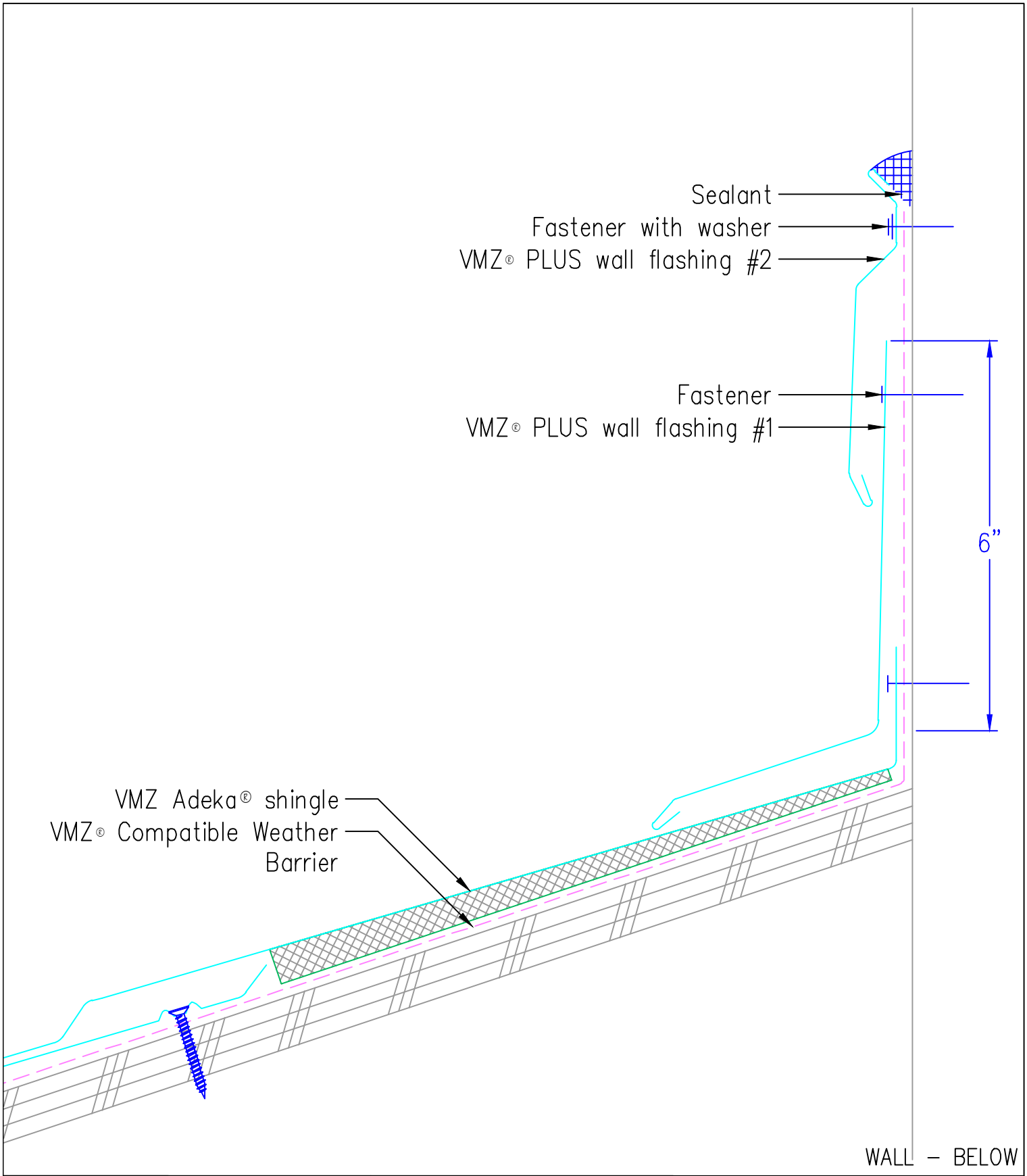

VMZINC

VM Building Solutions USA
1105 Tyron Village Dr
Suite 303 PMB 1029
Cary, NC 27518
(919) 296-8868 O.
(919) 648-4612 F.
www.vmzinc.com/en-us

Scale: 6" = 1' – 0"

Date: 04/30/2012

Drawn By: LDL

For general information e-mail: info@vmzinc-us.com

SYSTEM: Adeka-R

DRAWING: 1520

NOT A SHOP DRAWING

FOR ILLUSTRATION ONLY

While all technical information and suggestions herein are believed to be reliable and accurate, nothing stated herein is to be taken as a warranty, expressed or implied. Responsibility for review remains solely with the design authority or other authority

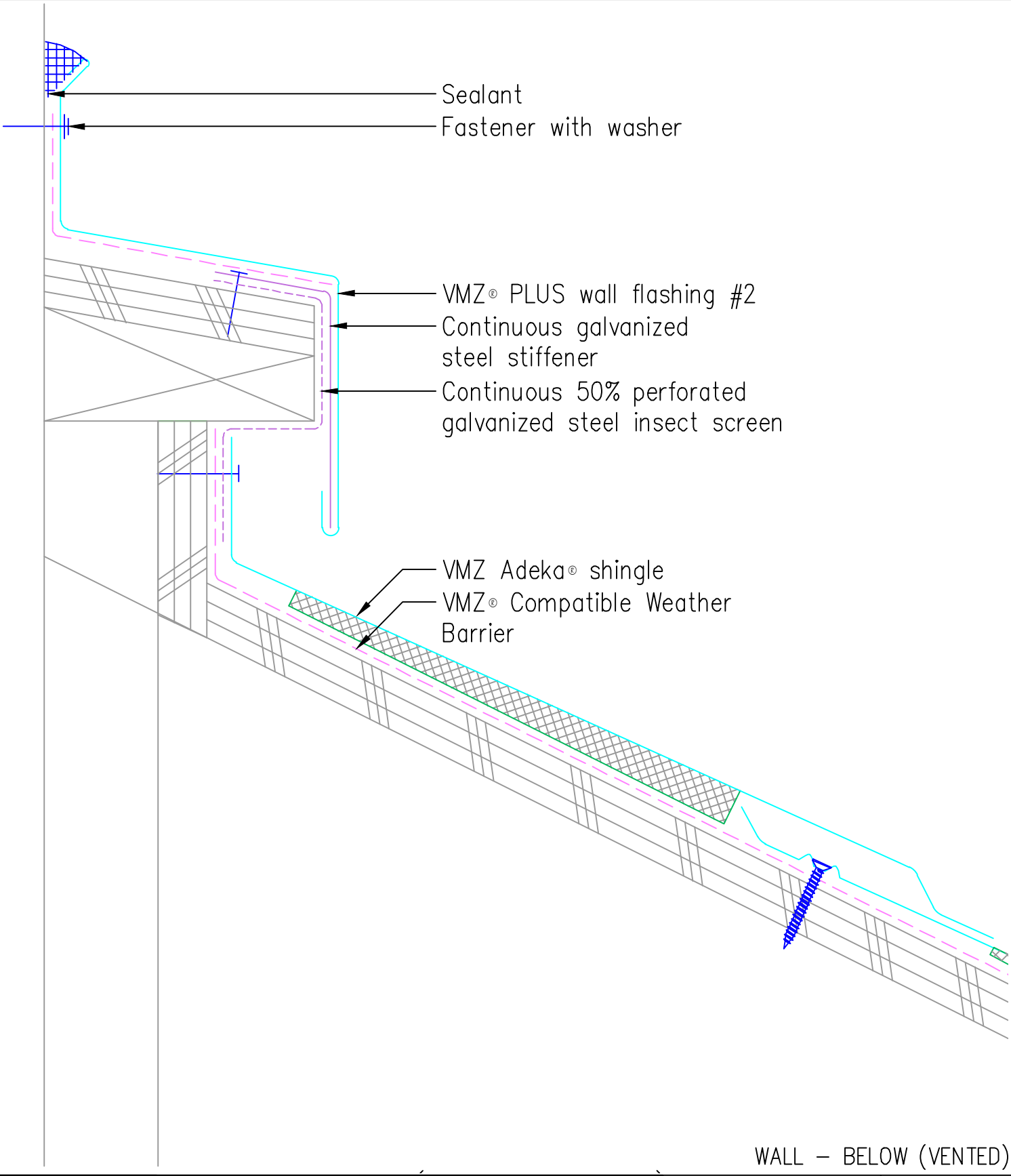

WALL – BELOW (VENTED)

VM Building Solutions USA
1105 Tyron Village Dr
Suite 303 PMB 1029
Cary, NC 27518
(919) 296-8868 O.
(919) 648-4612 F.
www.vmzinc.com/en-us

Scale: 6" = 1' – 0"
Date: 04/30/2012
Drawn By: LDL
For general information e-mail: info@vmzinc-us.com

SYSTEM: Adeka-R
DRAWING: 1521

www.vmzinc.com
NOT A SHOP DRAWING
FOR ILLUSTRATION ONLY
While all technical information and suggestions herein are believed to be reliable and accurate, nothing stated herein is to be taken as a warranty, expressed or implied. Responsibility for review remains solely with the design authority or other authority